aerospace
climate control
electromechanical
filtration
fluid & gas handling
hydraulics
pneumatics
process control
sealing & shielding

Safety Integrity Level
SIL
IEC61508

IQAN-MC3
Functional Safety Controller

Electronic Control Systems

Parker

GS GLOBAL RESOURCES
Foremost in Machine Performance for Life

GS Global Resources • 1-800-261-8735 • gsglobalresources.com
926 Perkins Drive, Mukwonago, WI 53149

Application

The IQAN-MC3 is a SIL2 rated master module in the IQANdesign platform. It can be used as a standalone controller, as a single bus master, or together with other IQAN master modules.

Safety

All IQAN modules are designed with the functional safety requirements of mobile machines in mind. The IQAN-MC3 is especially suited for applications with higher demands on functional safety, where there is a need to prove the safety integrity of each implemented safety function.

It is designed in accordance with IEC 61508, and can be used to implement safety functions of up to SIL2. When applying EN ISO 13849-1 for safety functions, it can be used as a PLd subsystem.

The correct operation of the IQAN-MC3 is monitored internally by its Tricore processor and the integrated co-processor.

All outputs have diagnostics for both internal and external faults, and have return switches that provide a redundant shut down path.

- Suitable for connection to output subsystems of category B, 1, 2, 3 or 4 in accordance with EN ISO13849-1, up to PLd.

For flexibility, the inputs can be configured either in pairs for safety functions, or as single inputs for normal functions.

- Suitable for connection to input subsystems of category 2 or 3 in acordance with EN ISO13849-1, up to PLd.

I/O

Inputs

All of the 32 inputs on the IQAN-MC3 can be used for safety related signals, when the inputs are configured in pairs.

On the unit there are analog inputs for 0-5 V signals from e.g. hall-effect or potentiometer sensors; digital inputs for e.g. switches; and frequency inputs. Frequency inputs can be configured to read signals from quadrature encoders, or alternatively to be used as digital inputs.

As a supply for sensors, it has two separately monitored 5 V reference signals.

Outputs

All of the outputs on the IQAN-MC3 can be used for safety related signals.

There are four proportional current outputs designed to drive proportional hydraulic valves, where each output controls one bi-directional valve section.

The unit also has five digital outputs for driving on-off solenoids. Two of these are also intended to function as alarm outputs, for e.g. LED lamps.

Installation

The enclosure is designed to protect the electronics in a harsh environment on mobile machines. It has good margins against high temperatures, is very robust to vibration, handles cycling of moisture and temperature well, and is well protected from water ingress.

On the front of the unit, there are four sealed and individually keyed Deutsch DT connectors.

It is designed for mounting outdoor on the chassis.

The unit has addressing in the wiring harness with an idTag, the addressing allows for up to 8 modules of this type on the same CAN bus.

General

Weight	1.1 kg
Temperature range	
Operating, ambient	-40 to +85 °C
Storage, ambient	-40 to +100 °C
Protection	outdoor, chassis
Voltage supply	9 - 32 Vdc
Current consumption (idle)	160 mA (24V) 240 mA (12V)

Safety

IEC 61508	Up to SIL2
EN ISO 13849-1	Up to PLd
PFHd	$< 10^{-7}$

Communication interfaces

CAN buses	4[1]
Protocols	Parker ICP (IQAN CAN Protocol) SAE J1939, Generic CAN

1) It is recommended that one CAN bus is dedicated for diagnostic purposes (PC interface)

Performance

Processor	32-bit TriCore
Sample time	≥10 ms.
Logging	80,000 records
Software tools	IQANdesign platform

Outputs

Proportional outputs	
Current output pairs	4
Type	current closed loop
Signal range	100-2000 mA
Dither frequency	70-333 Hz
Resolution	1 mA

Digital outputs

Dedicated digital outputs	5
Type	high side+low side switch
Max load	3 x 3 A 2 x 1.5 A

Inputs

Max number of inputs	32
Voltage inputs	
Number	16
Signal range	0 - 5 Vdc
Resolution	1.2 mV
Frequency inputs	
Number	8
Signal high	4 Vdc - 32 Vdc
Signal low	0 - 1 Vdc
Alternative configuration	Quadrature in (4) Digital in (8)

Digital inputs

Dedicated digital inputs	8
Signal high	4 Vdc - 32 Vdc
Signal low	0 - 1 Vdc

Connector

Type	4 x DT04-18P(A-D)

Ordering part numbers

IQAN-MC3	20077717

Environmental protection

EMI

ISO 13766/ISO 14982 (radiated emission)
EN 55025:2003 (conducted emission)
ISO 11452-2:2004 (immunity vs EM field)
ISO 11452-4:2005 (immunity vs injected RF)
ISO 7637-2:2004 (immunity vs supply transients)
ISO 7637-3:2007 (immunity vs supply transients)

ESD

ISO 10605:2008 (external)

Mechanical environment

IEC 60068-2-64:2008 Fh (random)
IEC 60068-2-27:2008 Ea (bump)

Climate environment

IEC 60529:2001 IP67 (dust, water)
DIN 40050 Part 9:1993 IP6K9K (steam jet cleaning)
IEC 60068-2-30:2005 Db (damp heat, cyclic)
IEC 60068-2-78:2001 Cab (damp heat, steady state)
IEC 60068-2-2:2007 Bb (heat)
IEC 60068-2-1:1993 Ab (cold)
IEC 60068-2-14:1984 Nb (change of temperature)

Chemical environment

IEC 60068-2-52:1996 Kb (salt mist, cyclic)

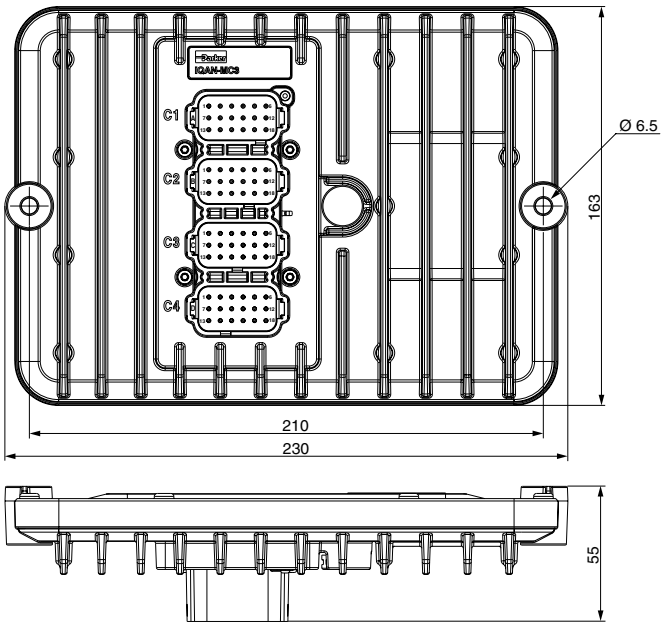

units = mm

⚠ WARNING - USER RESPONSIBILITY

FAILURE OR IMPROPER SELECTION OR IMPROPER USE OF THE PRODUCTS DESCRIBED HEREIN OR RELATED ITEMS CAN CAUSE DEATH, PERSONAL INJURY AND PROPERTY DAMAGE.

This document and other information from Parker-Hannifin Corporation, its subsidiaries and authorized distributors provide product or system options for further investigation by users having technical expertise.

The user, through its own analysis and testing, is solely responsible for making the final selection of the system and components and assuring that all performance, endurance, maintenance, safety and warning requirements of the application are met. The user must analyze all aspects of the application, follow applicable industry standards, and follow the information concerning the product in the current product catalog and in any other materials provided from Parker or its subsidiaries or authorized distributors.

To the extent that Parker or its subsidiaries or authorized distributors provide component or system options based upon data or specifications provided by the user, the user is responsible for determining that such data and specifications are suitable and sufficient for all applications and reasonably foreseeable uses of the components or systems.

Offer of Sale

Please contact your Parker representation for a detailed "Offer of Sale".

Parker Worldwide

Europe, Middle East, Africa

AE – United Arab Emirates, Dubai
Tel: +971 4 8127100
parker.me@parker.com

AT – Austria, Wiener Neustadt
Tel: +43 (0)2622 23501-0
parker.austria@parker.com

AT – Eastern Europe, Wiener Neustadt
Tel: +43 (0)2622 23501 900
parker.easteurope@parker.com

AZ – Azerbaijan, Baku
Tel: +994 50 2233 458
parker.azerbaijan@parker.com

BE/LU – Belgium, Nivelles
Tel: +32 (0)67 280 900
parker.belgium@parker.com

BY – Belarus, Minsk
Tel: +375 17 209 9399
parker.belarus@parker.com

CH – Switzerland, Etoy
Tel: +41 (0)21 821 87 00
parker.switzerland@parker.com

CZ – Czech Republic, Klecany
Tel: +420 284 083 111
parker.czechrepublic@parker.com

DE – Germany, Kaarst
Tel: +49 (0)2131 4016 0
parker.germany@parker.com

DK – Denmark, Ballerup
Tel: +45 43 56 04 00
parker.denmark@parker.com

ES – Spain, Madrid
Tel: +34 902 330 001
parker.spain@parker.com

FI – Finland, Vantaa
Tel: +358 (0)20 753 2500
parker.finland@parker.com

FR – France, Contamine s/Arve
Tel: +33 (0)4 50 25 80 25
parker.france@parker.com

GR – Greece, Athens
Tel: +30 210 933 6450
parker.greece@parker.com

HU – Hungary, Budapest
Tel: +36 1 220 4155
parker.hungary@parker.com

IE – Ireland, Dublin
Tel: +353 (0)1 466 6370
parker.ireland@parker.com

IT – Italy, Corsico (MI)
Tel: +39 02 45 19 21
parker.italy@parker.com

KZ – Kazakhstan, Almaty
Tel: +7 7272 505 800
parker.easteurope@parker.com

NL – The Netherlands, Oldenzaal
Tel: +31 (0)541 585 000
parker.nl@parker.com

NO – Norway, Asker
Tel: +47 66 75 34 00
parker.norway@parker.com

PL – Poland, Warsaw
Tel: +48 (0)22 573 24 00
parker.poland@parker.com

PT – Portugal, Leca da Palmeira
Tel: +351 22 999 7360
parker.portugal@parker.com

RO – Romania, Bucharest
Tel: +40 21 252 1382
parker.romania@parker.com

RU – Russia, Moscow
Tel: +7 495 645-2156
parker.russia@parker.com

SE – Sweden, Spånga
Tel: +46 (0)8 59 79 50 00
parker.sweden@parker.com

SK – Slovakia, Banská Bystrica
Tel: +421 484 162 252
parker.slovakia@parker.com

SL – Slovenia, Novo Mesto
Tel: +386 7 337 6650
parker.slovenia@parker.com

TR – Turkey, Istanbul
Tel: +90 216 4997081
parker.turkey@parker.com

UA – Ukraine, Kiev
Tel +380 44 494 2731
parker.ukraine@parker.com

UK – United Kingdom, Warwick
Tel: +44 (0)1926 317 878
parker.uk@parker.com

ZA – South Africa, Kempton Park
Tel: +27 (0)11 961 0700
parker.southafrica@parker.com

North America

CA – Canada, Milton, Ontario
Tel: +1 905 693 3000

US – USA, Cleveland (industrial)
Tel: +1 216 896 3000

US – USA, Elk Grove Village (mobile)
Tel: +1 847 258 6200

Asia Pacific

AU – Australia, Castle Hill
Tel: +61 (0)2-9634 7777

CN – China, Shanghai
Tel: +86 21 2899 5000

HK – Hong Kong
Tel: +852 2428 8008

IN – India, Mumbai
Tel: +91 22 6513 7081-85

JP – Japan, Fujisawa
Tel: +81 (0)4 6635 3050

KR – South Korea, Seoul
Tel: +82 2 559 0400

MY – Malaysia, Shah Alam
Tel: +60 3 7849 0800

NZ – New Zealand, Mt Wellington
Tel: +64 9 574 1744

SG – Singapore
Tel: +65 6887 6300

TH – Thailand, Bangkok
Tel: +662 717 8140

TW – Taiwan, Taipei
Tel: +886 2 2298 8987

South America

AR – Argentina, Buenos Aires
Tel: +54 3327 44 4129

BR – Brazil, Cachoeirinha RS
Tel: +55 51 3470 9144

CL – Chile, Santiago
Tel: +56 2 623 1216

MX – Mexico, Apodaca
Tel: +52 81 8156 6000

Ed. 2011-07-07

Catalogue HY33-8001/UK, POD 08/2011 EMDC

European Product Information Centre
Free phone: 00 800 27 27 5374
(from AT, BE, CH, CZ, DE, DK, EE, ES, FI, FR, IE, IL, IS, IT, LU, MT, NL, NO, PL, PT, RU, SE, SK, UK, ZA)
US Product Information Centre
Free phone: 1 800 272 7537
www.parker.com

Parker

Your local authorized Parker distributor