V1-2-M20

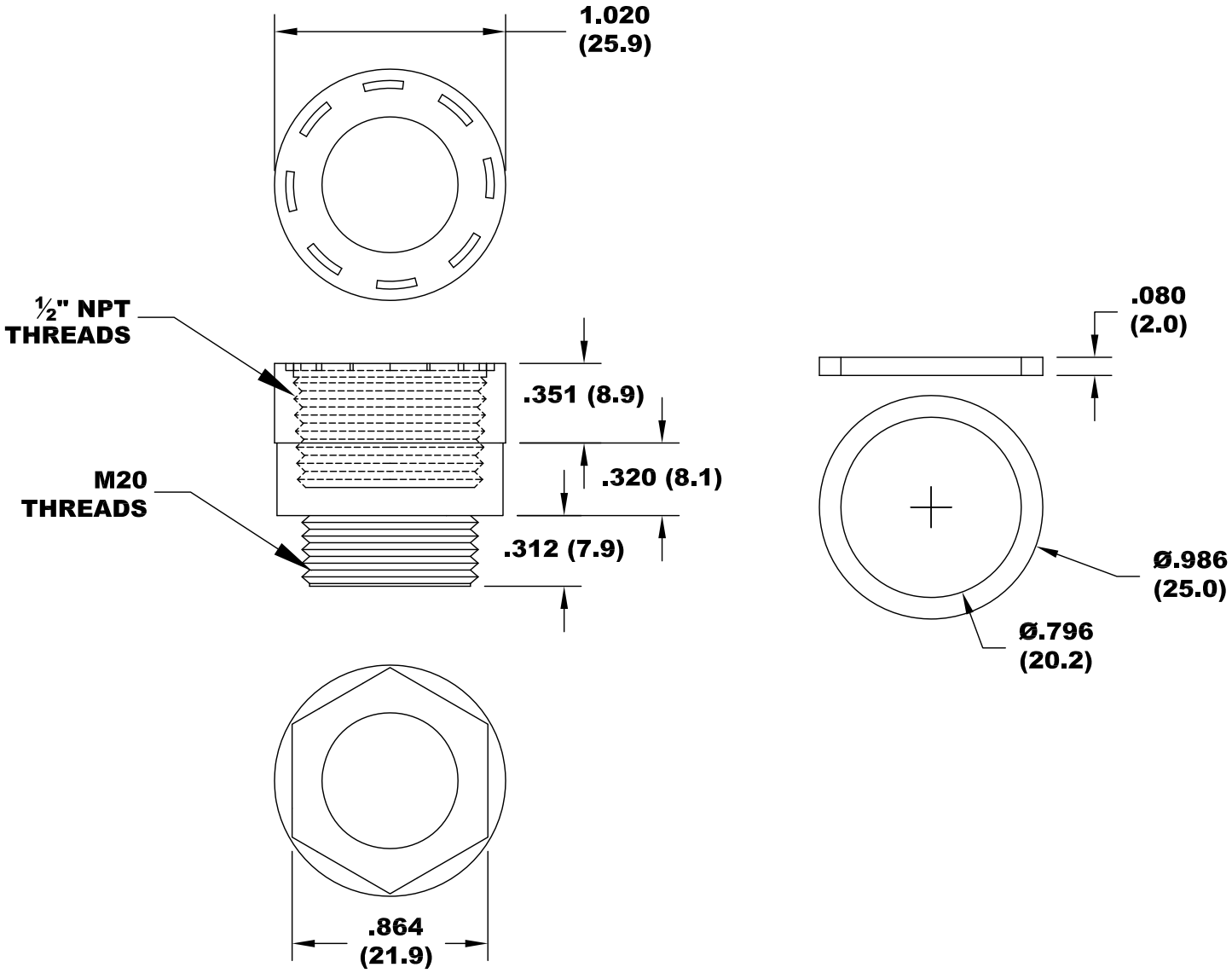

DATE	REV	DESCRIPTION	DWN	ENG	MFG	OTHR
--	--	-	--	--	--	-
--	--	-	--	--	--	-
--	--	-	--	--	--	-
--	--	-	--	--	--	-
--	--	-	--	--	--	-
--	--	-	--	--	--	-
--	--	-	--	--	--	-

THIRD ANGLE PROJECTION

= CRITICAL DIMENSION TO BE INSPECTED

UNLESS OTHERWISE SPECIFIED DIMENSIONS ARE IN INCHES TOLERANCES ARE:

DECIMAL:	ANGULAR:
.XX ± .01 .XXX ± .005 .XXXX ± .001	∠ ±30'

MATL:
.
.

FINISH:
.
.

DWN	H. WEYMOUTH
DATE	09/13/2011
CHK	---
ENG	H. WEYMOUTH
MFG	---
OTHR	---
OTHR	---
SCALE: .	SHT 1 OF 1

EATON
6500 HARBOUR HT'S PKWY
SUITE 320
MUKILTEO, WA 98275
(425) 349-5240

Conduit Adapter M20 to 1/2" NPT For Plastic Switch Bodies

SIZE	DRAWING NO. (AutoCAD)	REV
A	90-26804-033	01